RETRIA Cultured Marble Bath 1680x752x555mm, glossy white

Order code: GVRE1680

Size

Length:	1680 mm
Width:	750 mm
Height:	555 mm
Volume:	240 l

Properties

Colour:	White
Material:	Cast marble
Warranty:	3 years
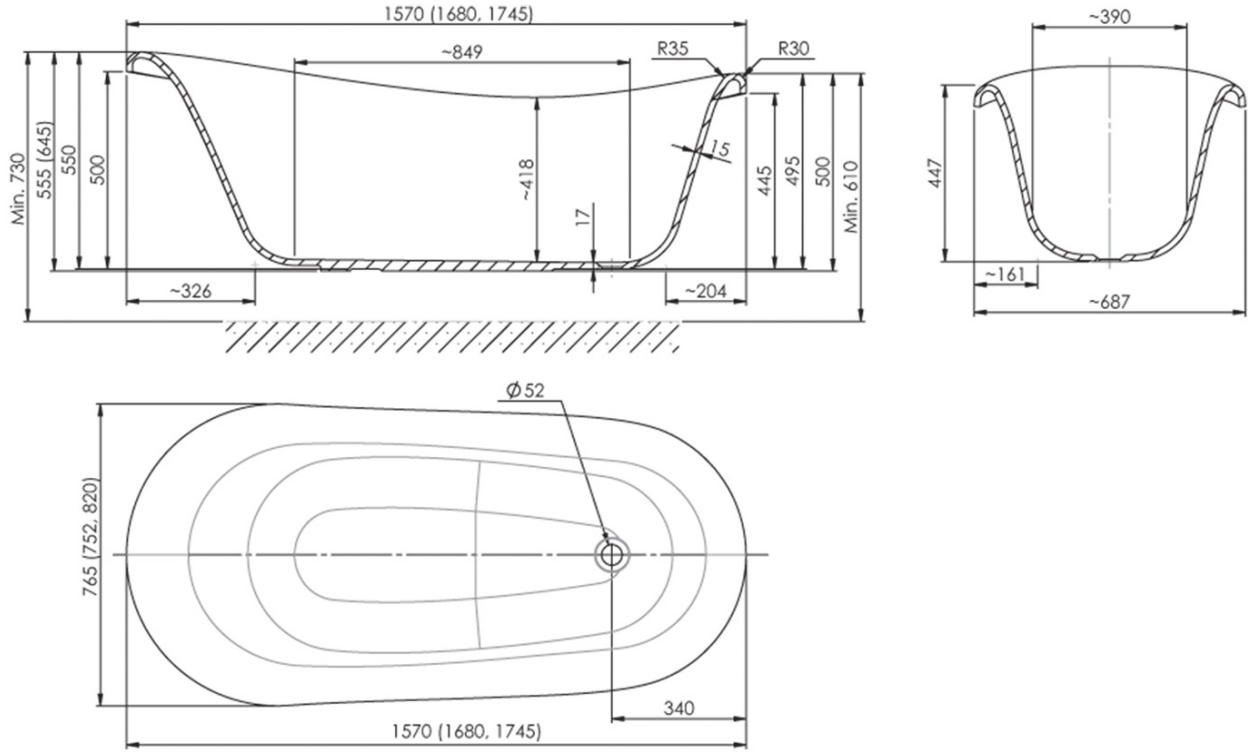
Technical sheet