RIVA Cultured Marble Shower Tray 120x90 cm, right

Order code: GR12090R

Size

Length:	1200 mm
Width:	900 mm
Height:	40 mm
Depth:	20 mm

Properties

Colour:	White
Material:	Cast marble
Warranty:	3 years
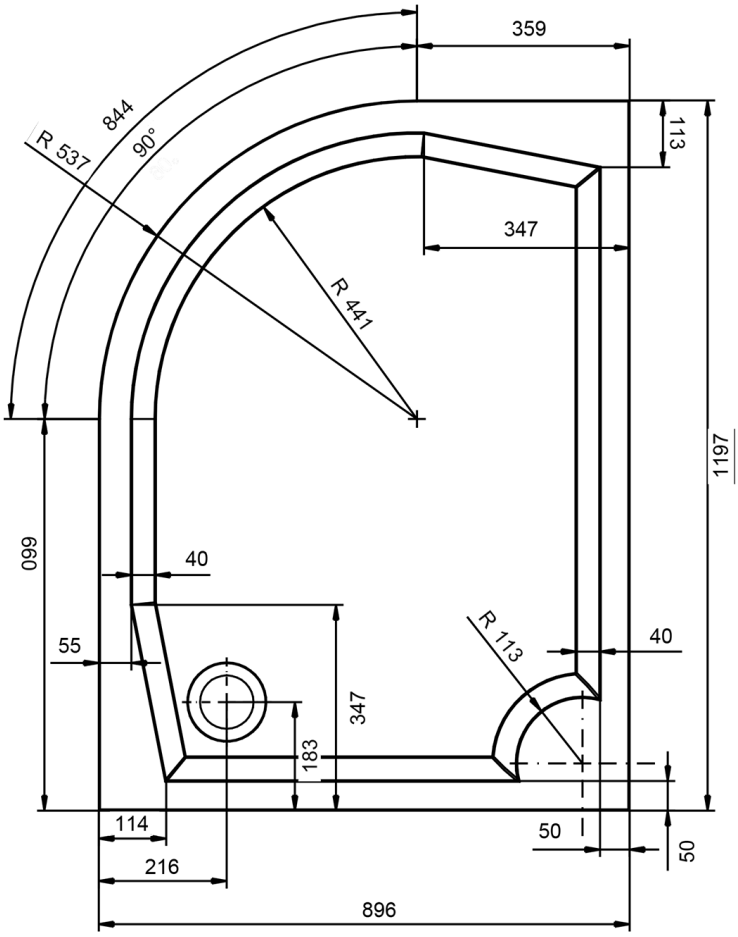
Technical sheet