MONA LED Light Mirror 700x1000mm, white

Order code: DL440

Basic information

Brand:	Sapho

Size

Width:	700 mm
Height:	1000 mm

Properties

Mirrors type:	Mirrors with lighting, Mirrors in frame
Type of Light:	LED
Electrical protection:	IP44
Voltage:	230 V
Wattage:	15 W
Equipment:	Illuminated, Switch
Weight / Piece:	9.08 kg
Packing:	1 Piece
Guarantee:	2 years
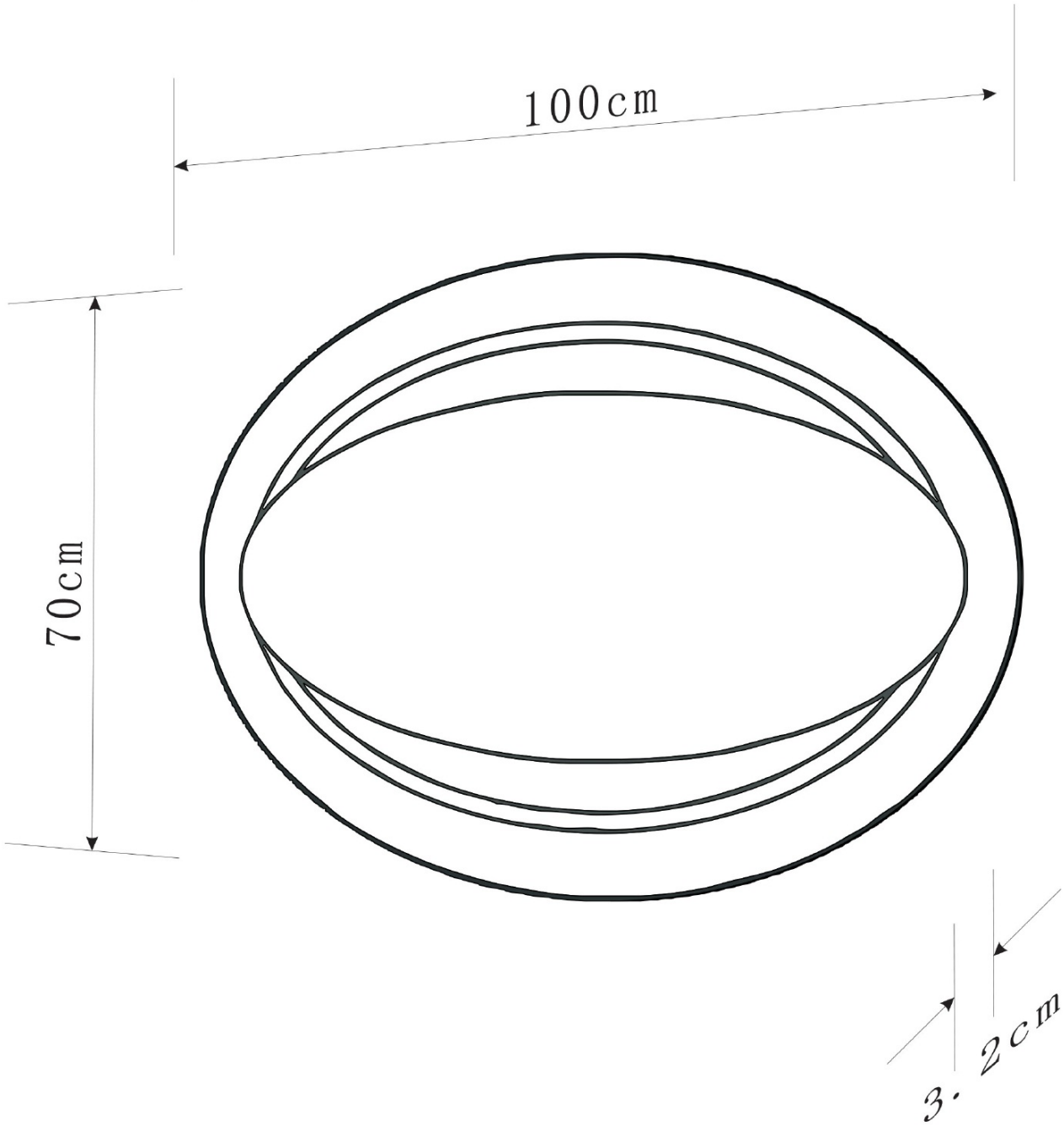
Technical sheet