ATIKA shower tray, cast marble, quadrant 90x90x3,5cm, R550, white stone decor

Order code: AK001

Size
Length: 900 mm
Width: 900 mm
Height: 35 mm

Properties
Colour: White
Material: Cast marble
Warranty: 2 years
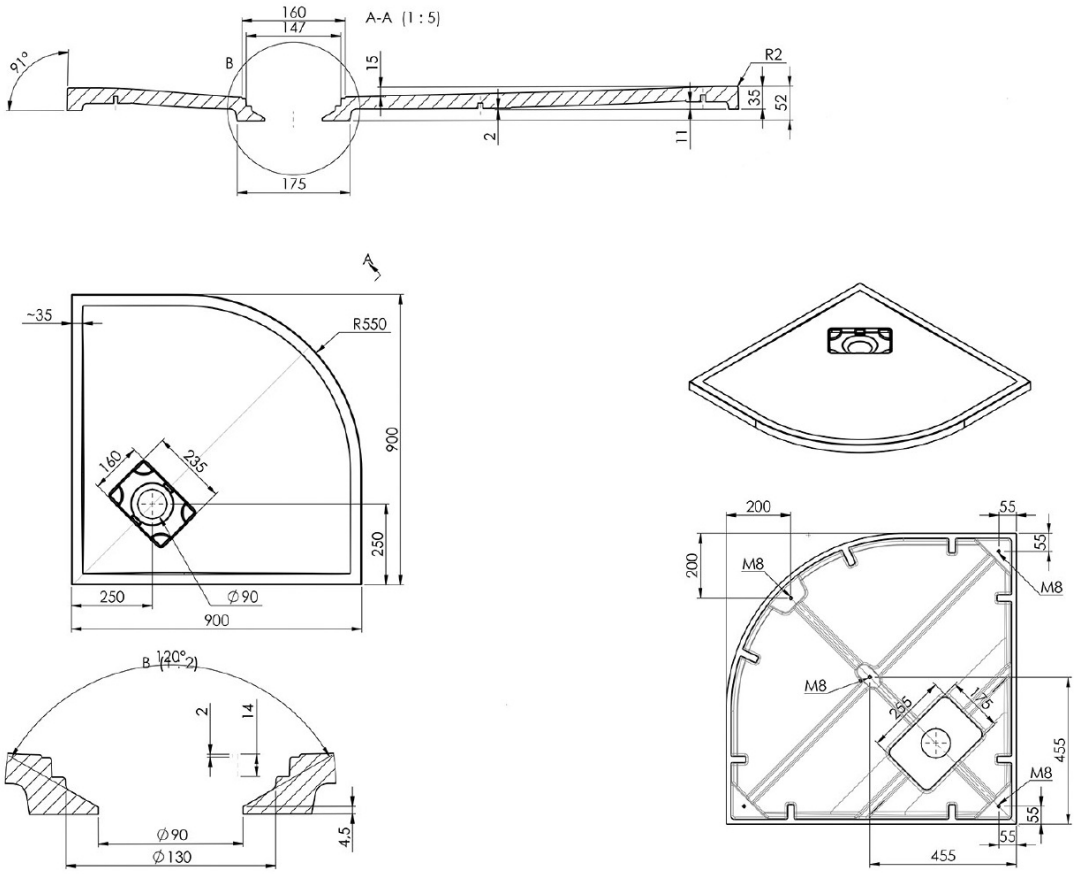
Technical sheet