ORINOKO Cast Marble Double Washbasin, 100x42 cm, white

Order code: OR101

Size

Width:	1000 mm
Depth:	420 mm

Properties

Warranty:	2 years
Colour:	White
Material:	Cast marble
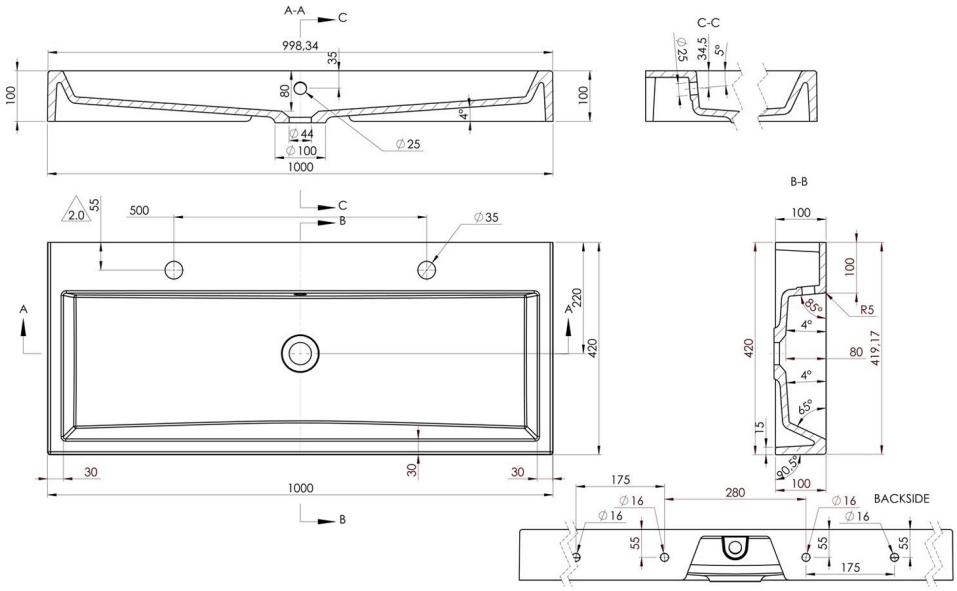
Technical sheet