ORINOKO Cast Marble Washbasin 70x10x42cm

Order code: OR070

Size
Width: 700 mm
Depth: 420 mm

Properties
Colour: White
Material: Cast marble
Warranty: 2 years
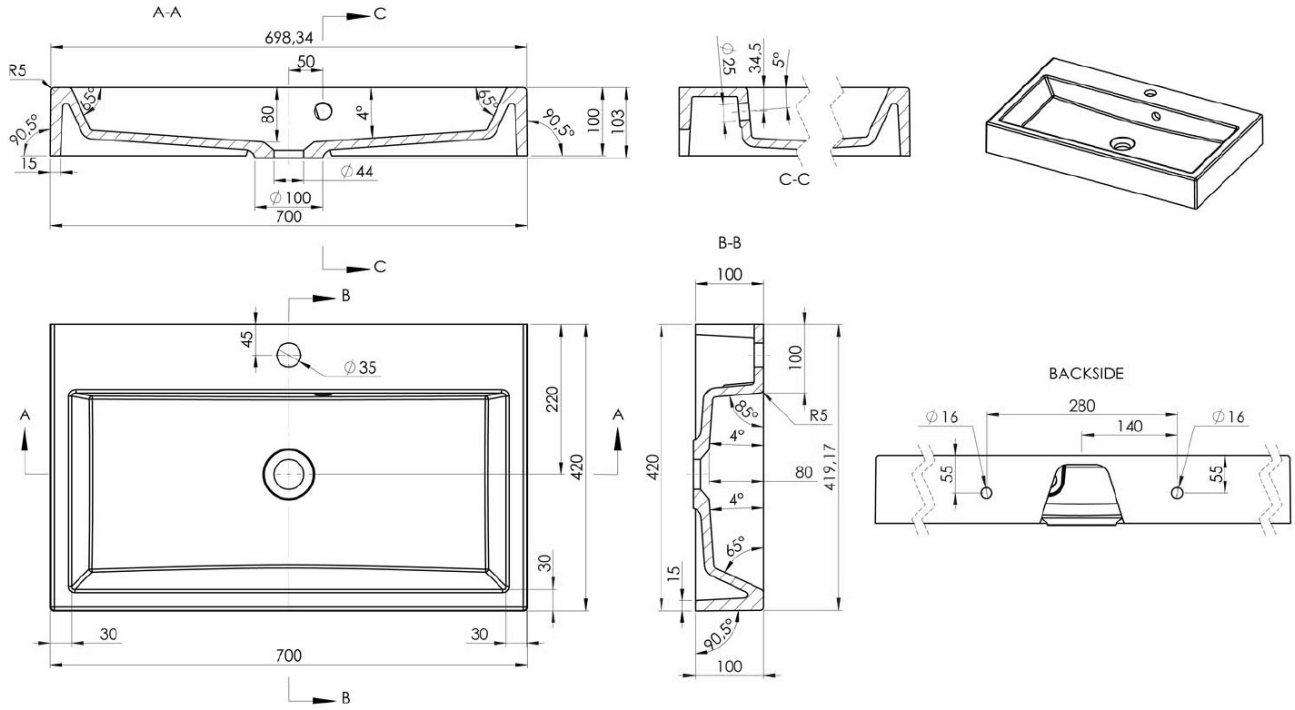
Technical sheet