ALABAMA Cultured Marble Washbasin 36x11x23cm, right/ white

Order code: AL565

Size

Width:	360 mm
Height:	110 mm
Depth:	230 mm

Properties

Colour:	White
Material:	Cast marble
Warranty:	2 years
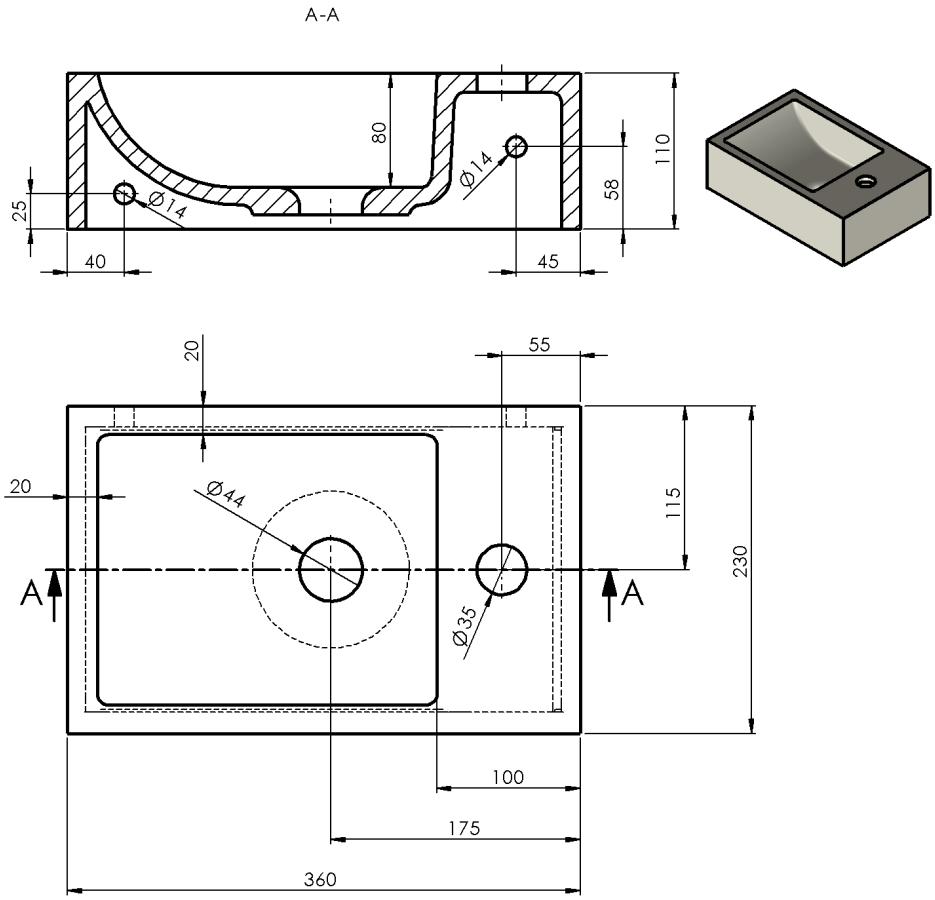
Technical sheet