GLAM 3 Hole Deck Mounted Mixer Tap, chrome

Order code: GLAMTECH3

Size

Width:	260 mm
Height:	145 mm
Depth:	237 mm

Properties

Colour:	Chrome
Material:	Brass
Warranty:	5 years
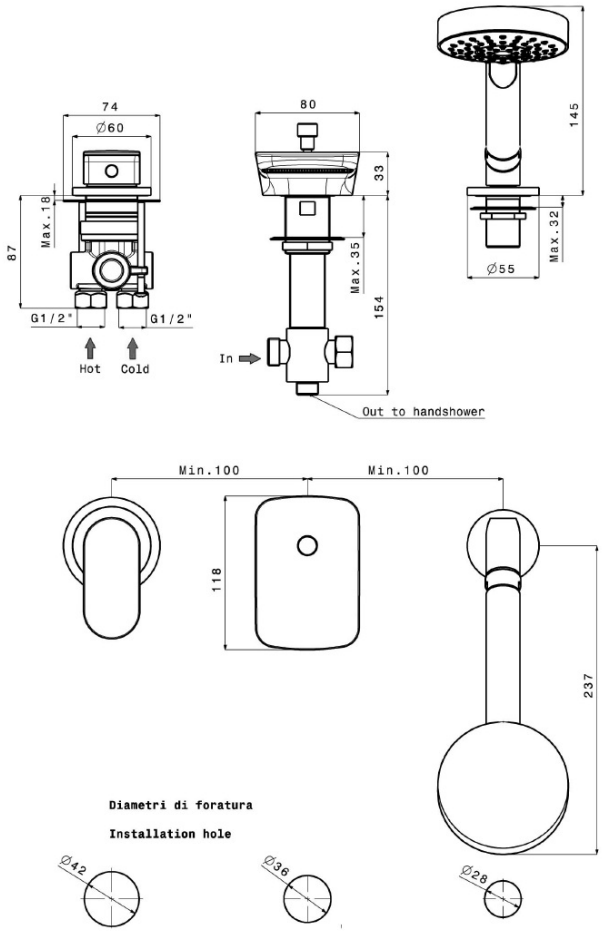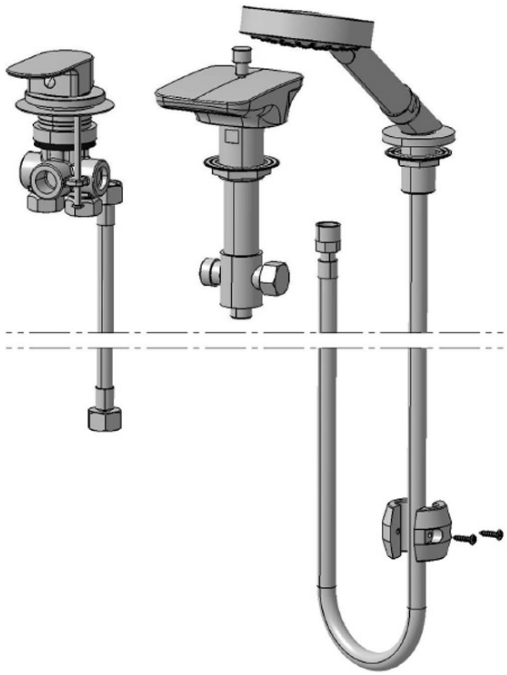
Technical sheet