AIRTECH Concealed Diverter, 2-way, chrome

Order code: DEVIN4

Basic information

Brand: Sapho

Properties

Colour:	Chrome
Material:	Brass
Shape:	Circular
Installation:	Concealed
Other:	2 outlets
Weight / Piece:	1.45 kg
Packaging:	1 Piece
Warranty:	6 years

Spare parts

Cartridge with integrated switch 30mm (DEVIN2, DEVIN4, DEVIN5, DEVIN10, 331, 388) (Order code: 2727)
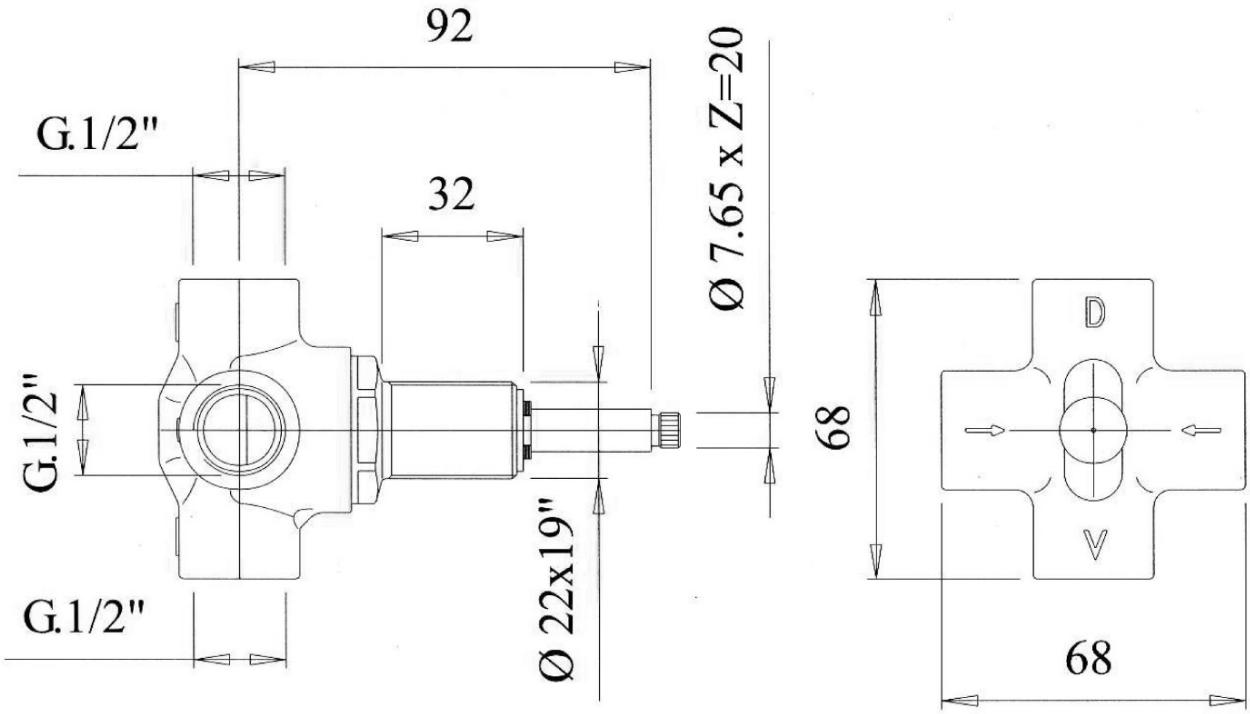
Technical sheet