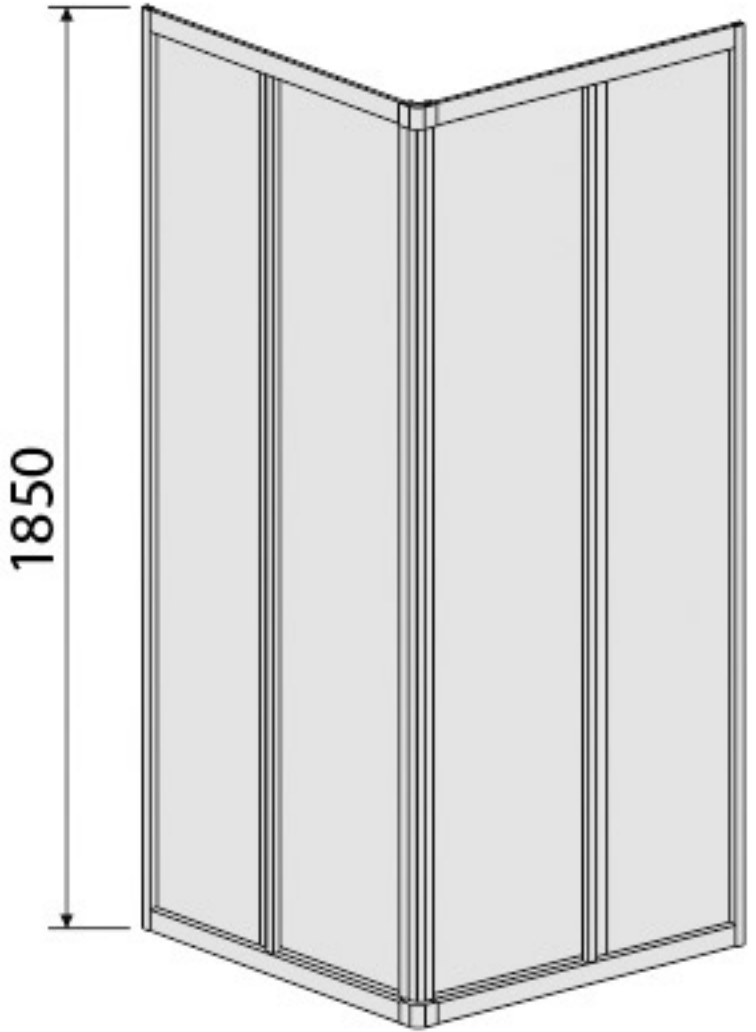

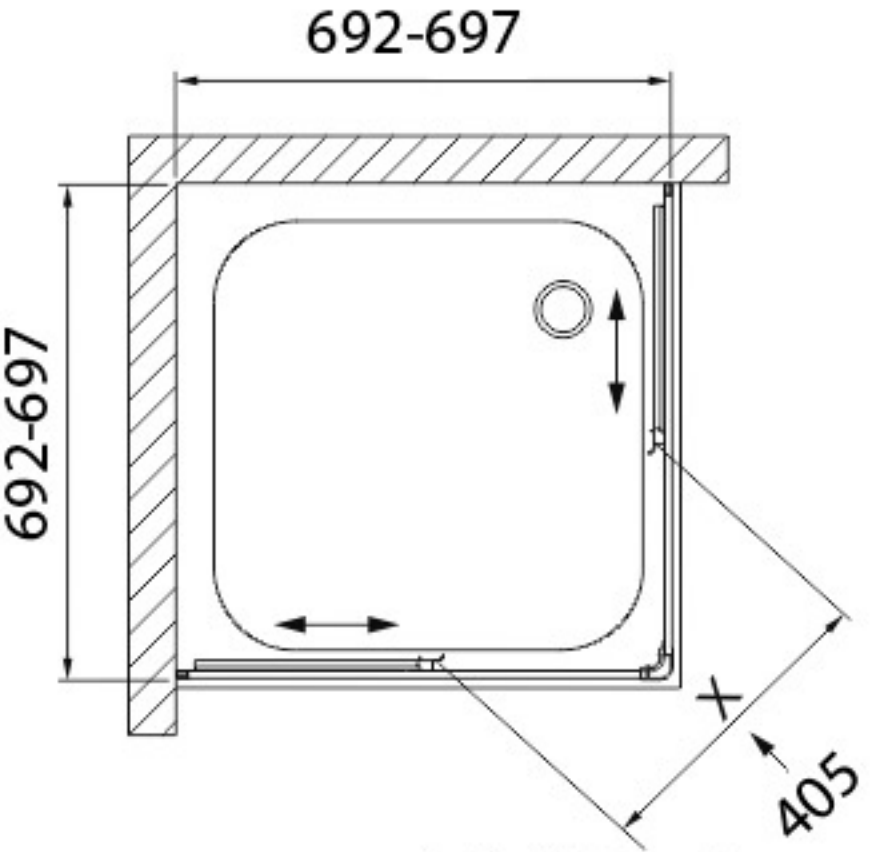

KNS-C-70