51055
51056

MONTÁŽNÍ NÁVOD
ASSEMBLY INSTRUCTION

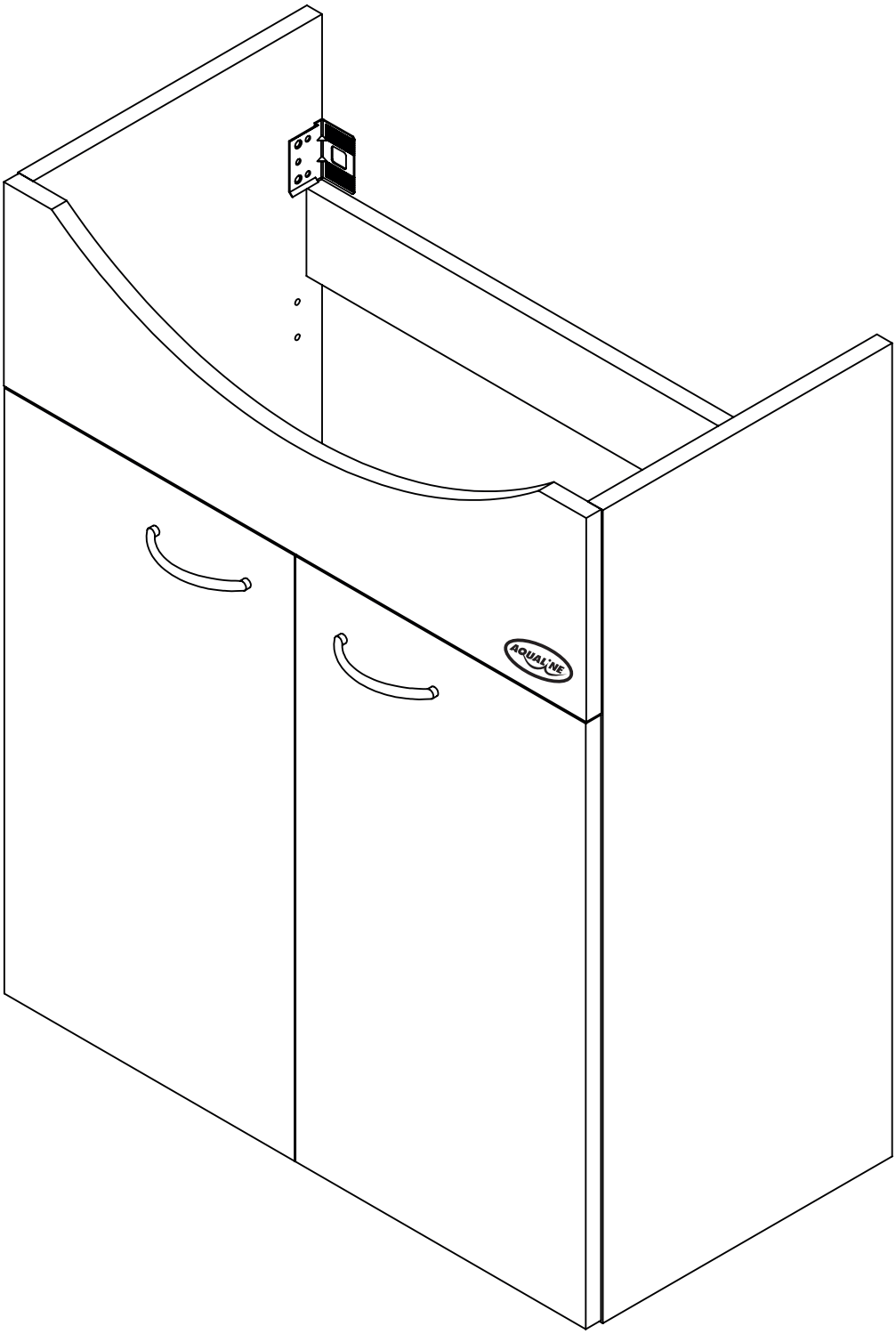

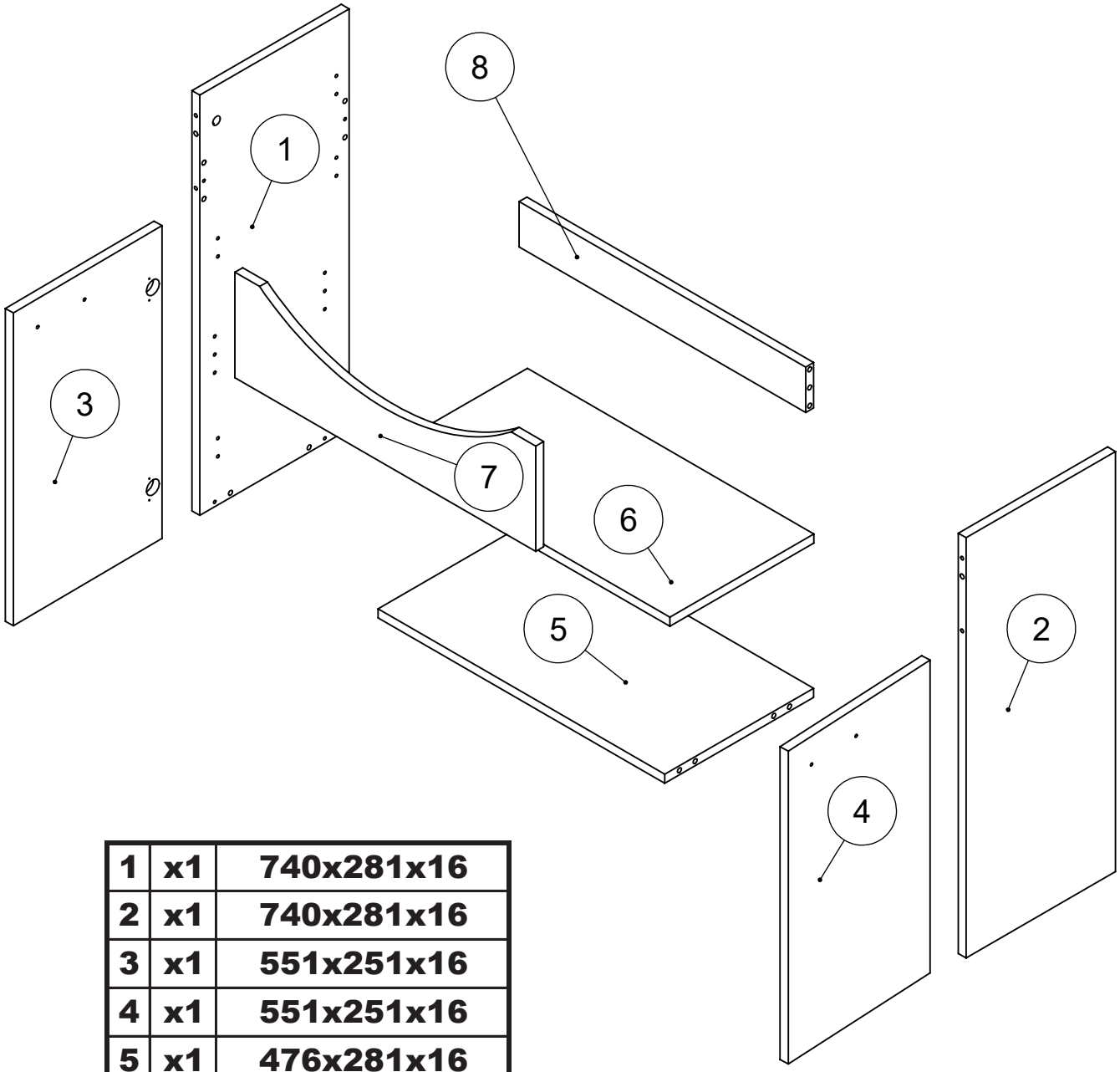

1	x1	740x281x16
2	x1	740x281x16
3	x1	551x251x16
4	x1	551x251x16
5	x1	476x281x16
6	x1	476x271x16
7	x1	504x185.5x16
8	x1	476x80x16

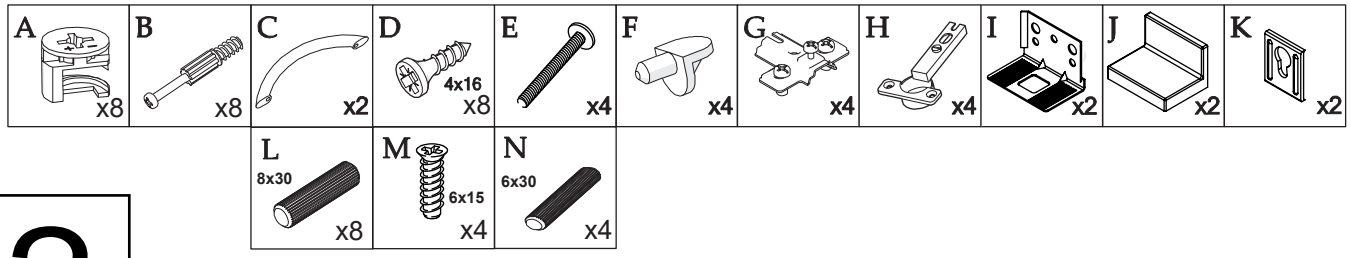

2

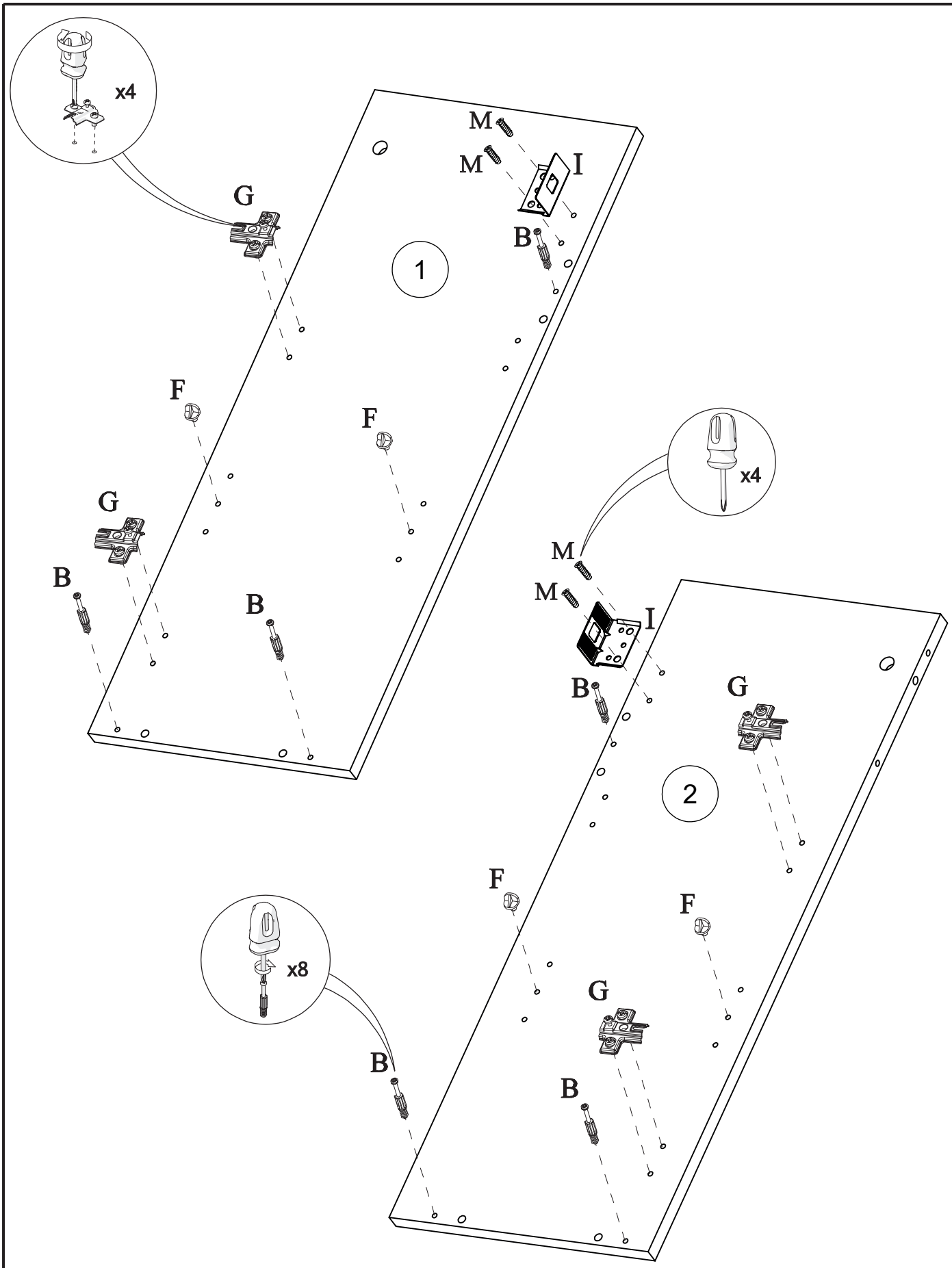

B	F	G	I	M
x6	x4	x4	x2	6x15 x4

3

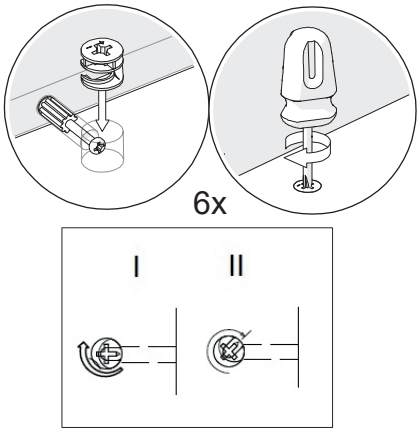

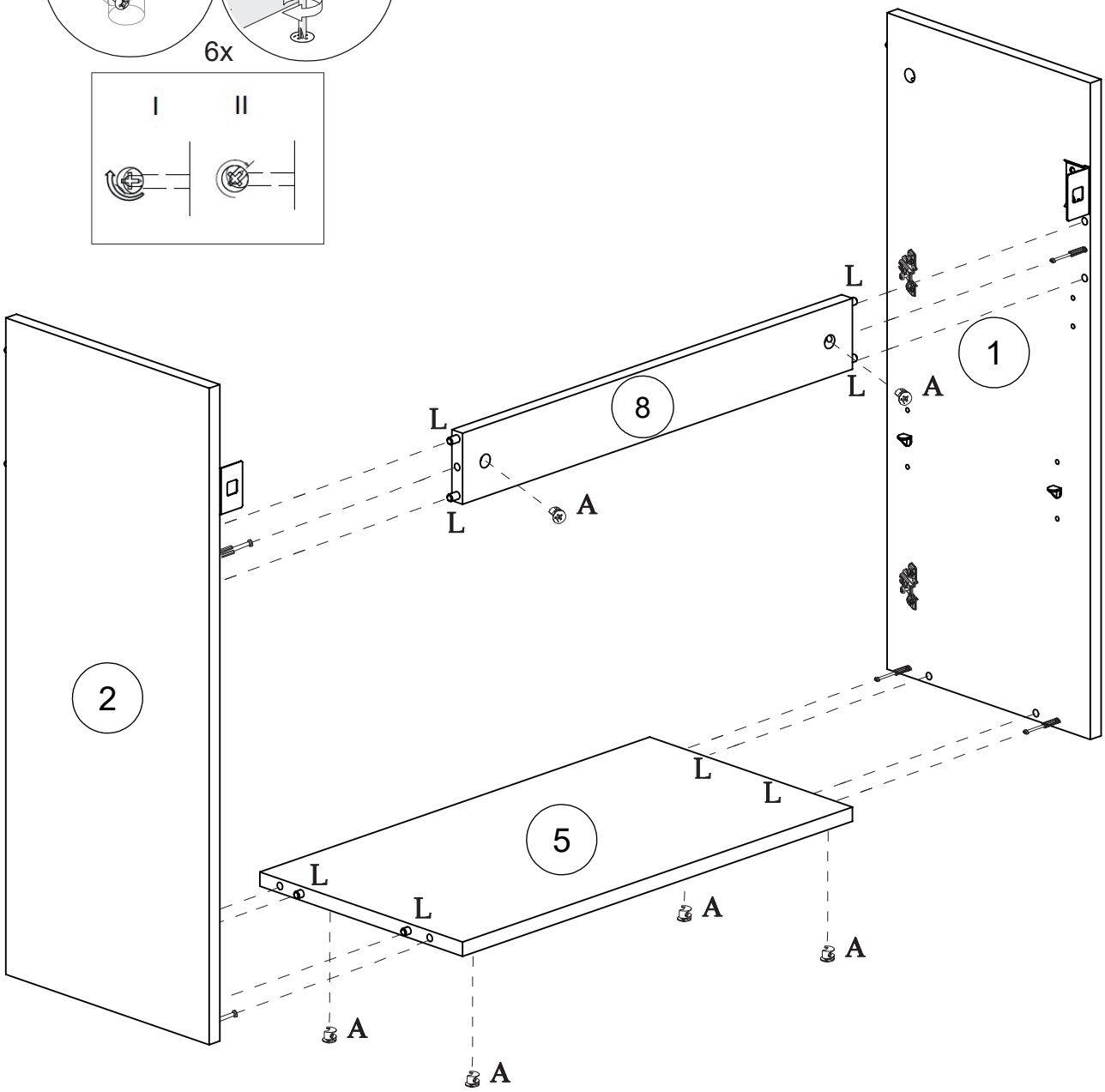

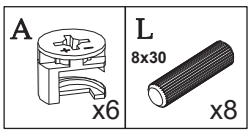

4

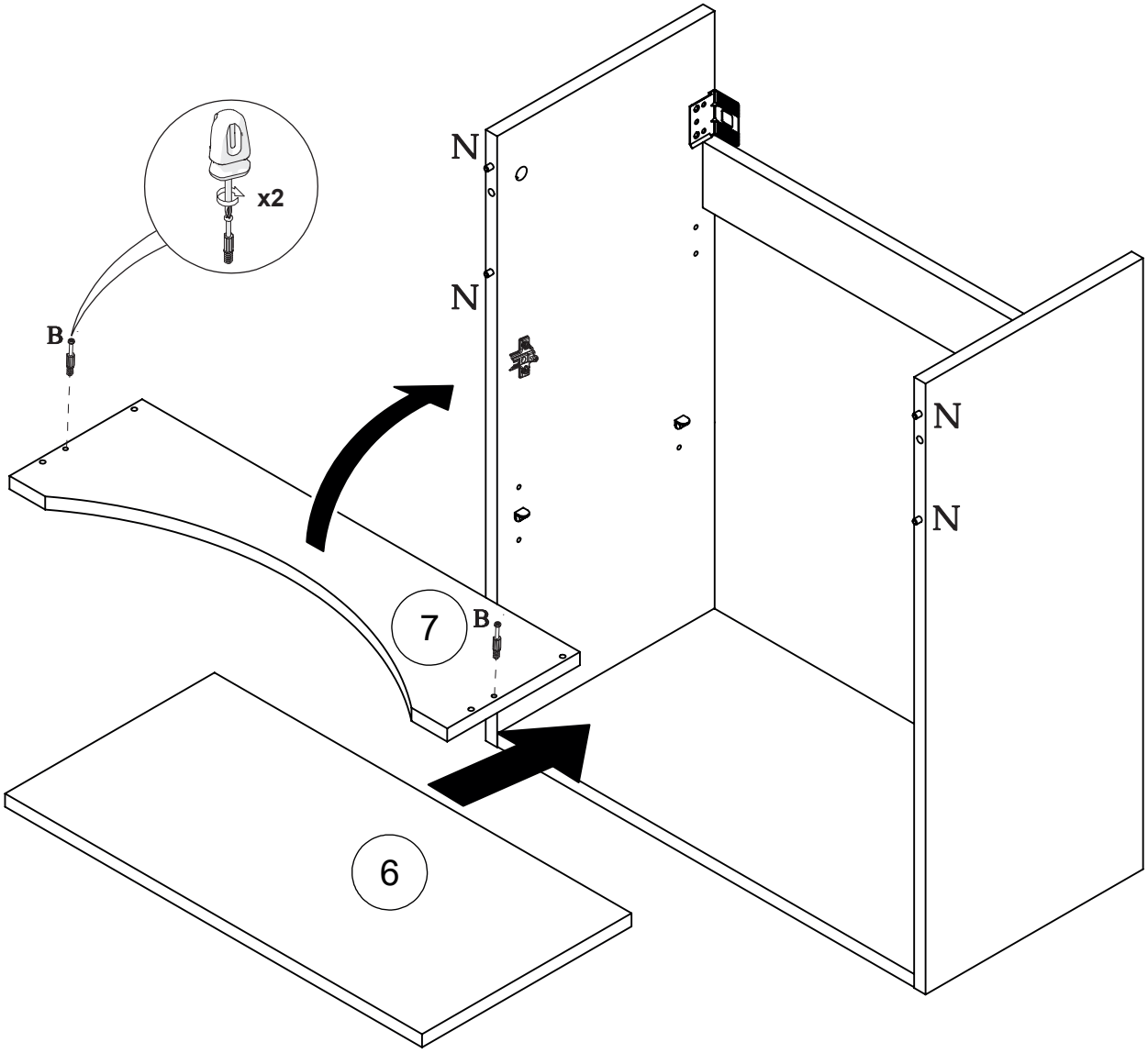
x2
B
N
N
N
N
7
B
6

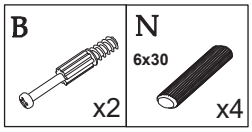
B
x2
N
6x30
x4

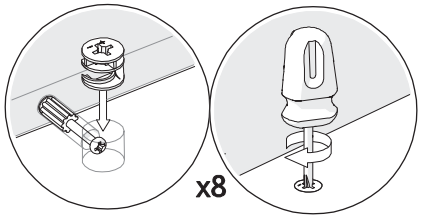

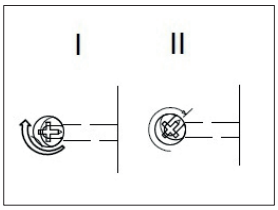

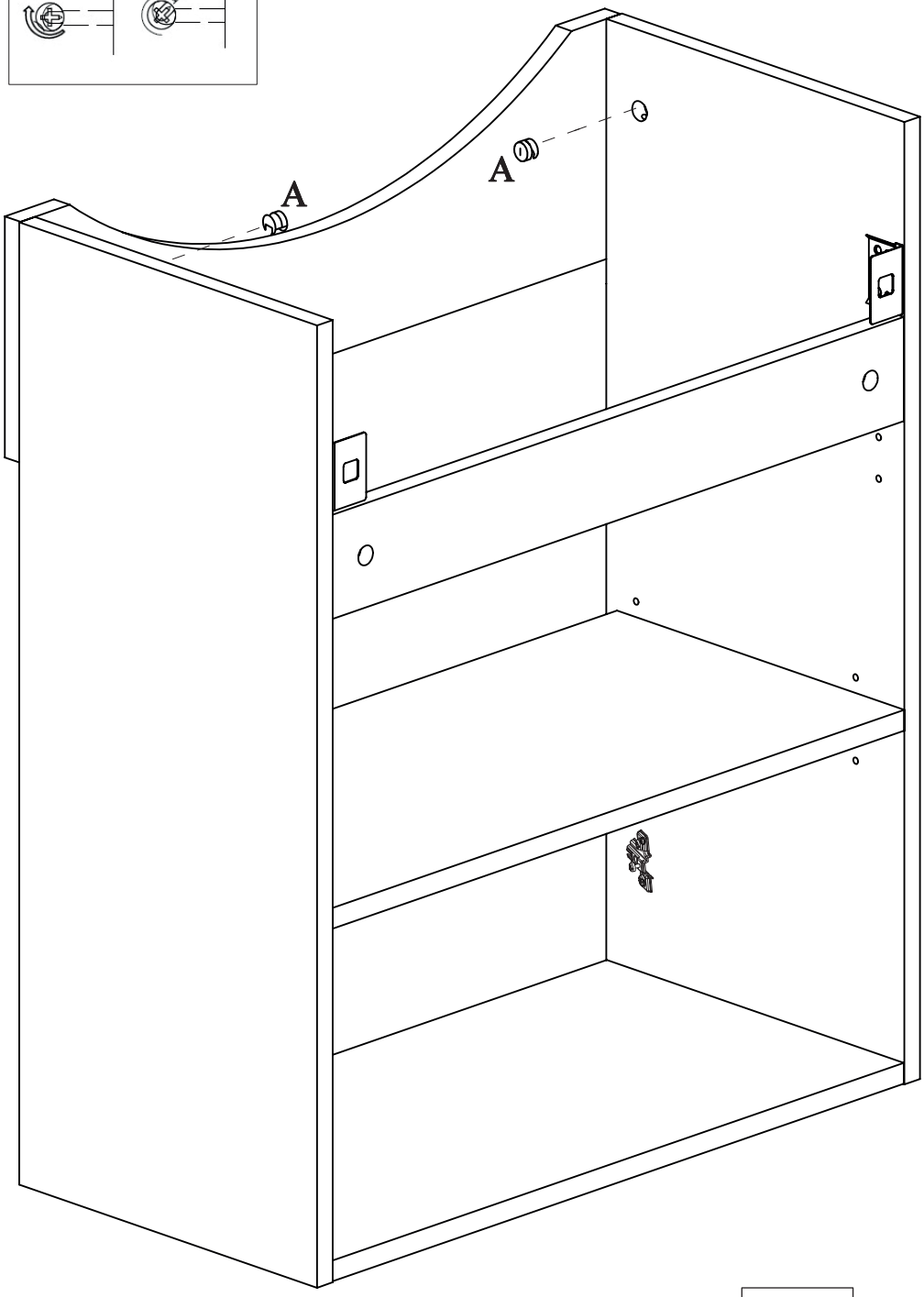

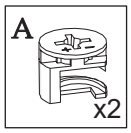

6

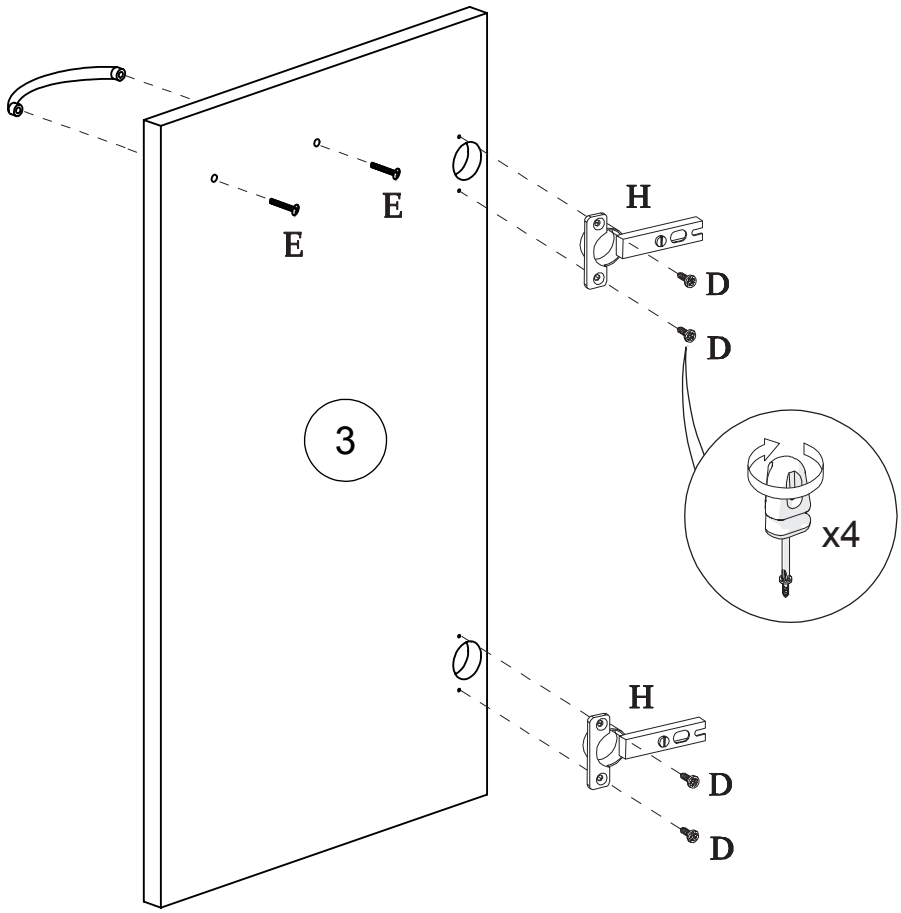
E
E
H
D
D
3
x4
H
D
D

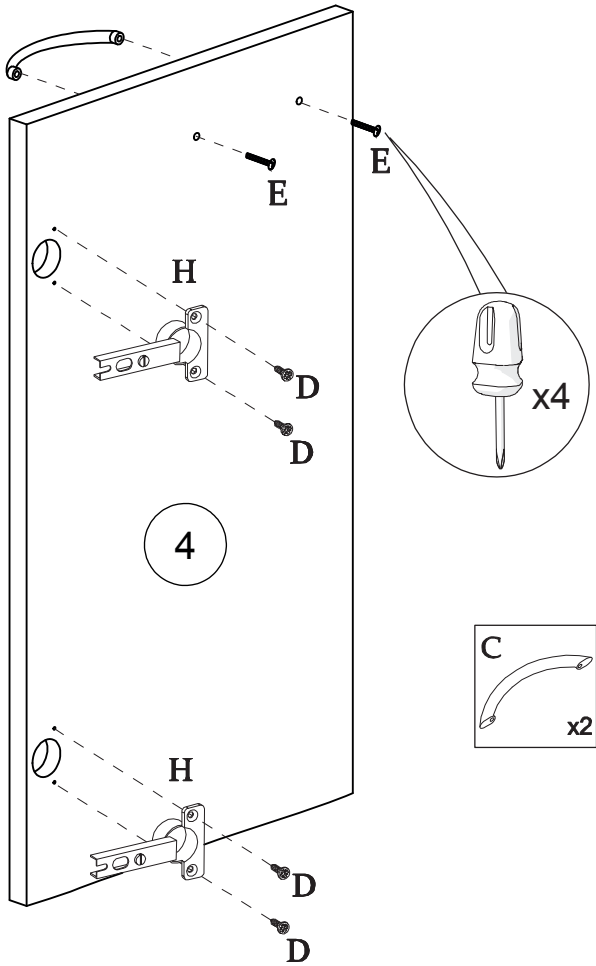
E
E
H
D
D
x4
4
H
D
D

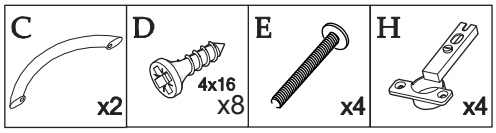
C
x2
D
4x16
x8
E
x4
H
x4

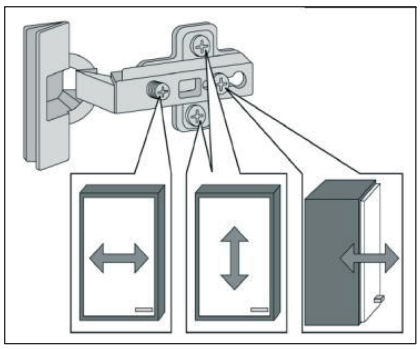

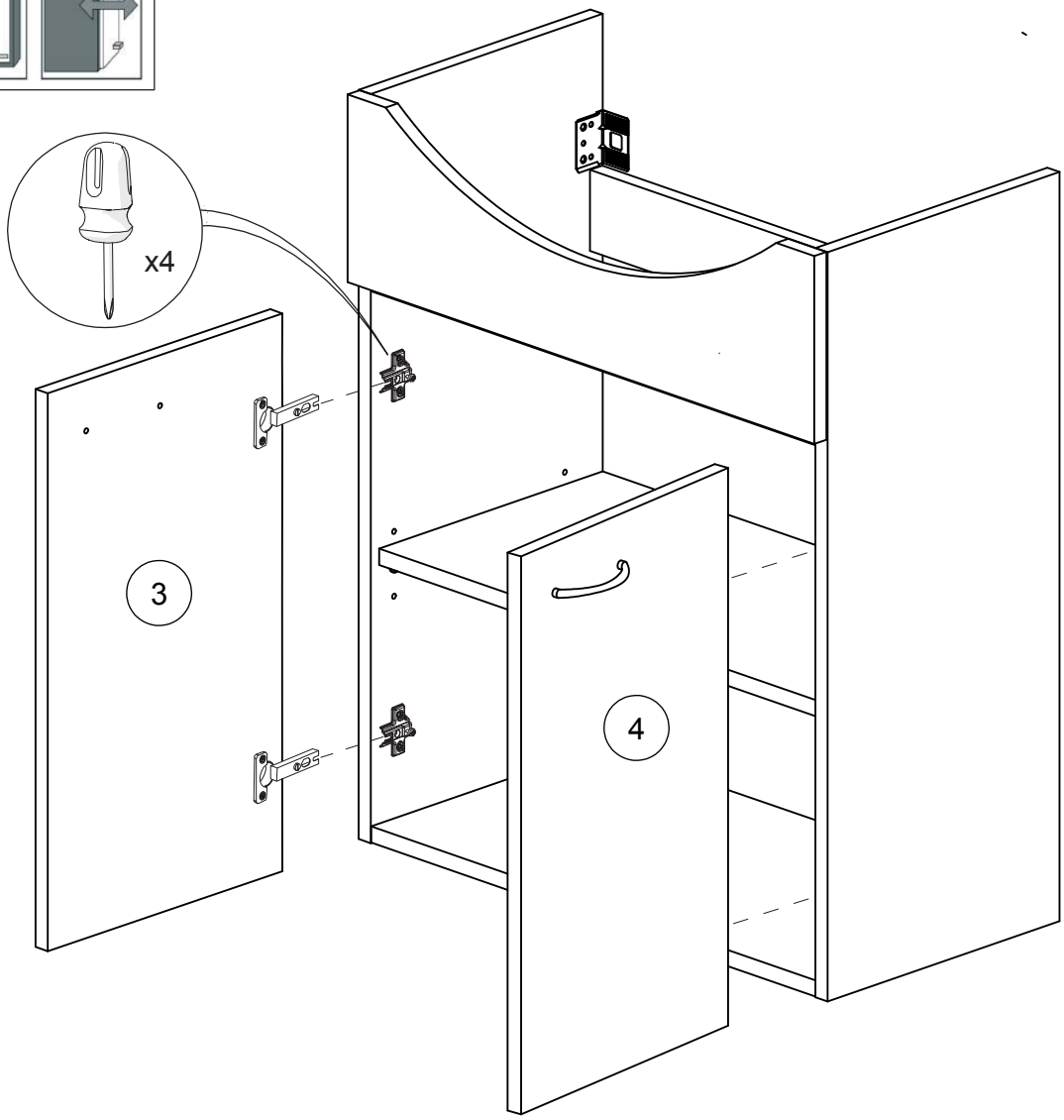

8

9

2x

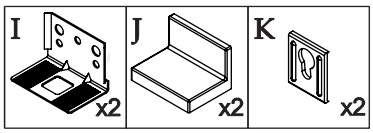
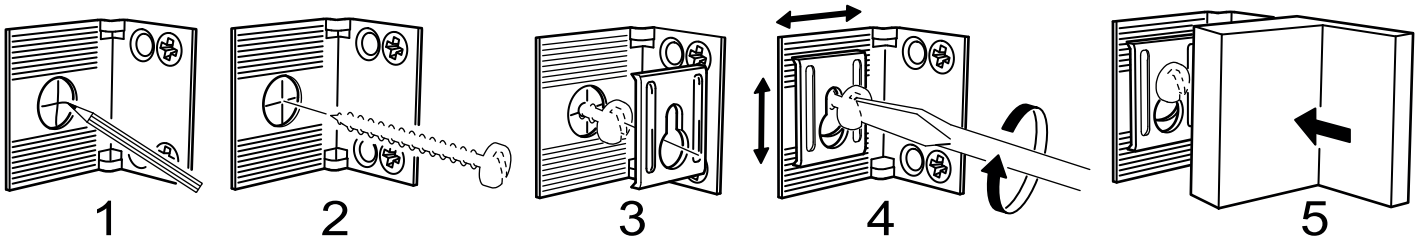
I I I+K I+K I+K+J