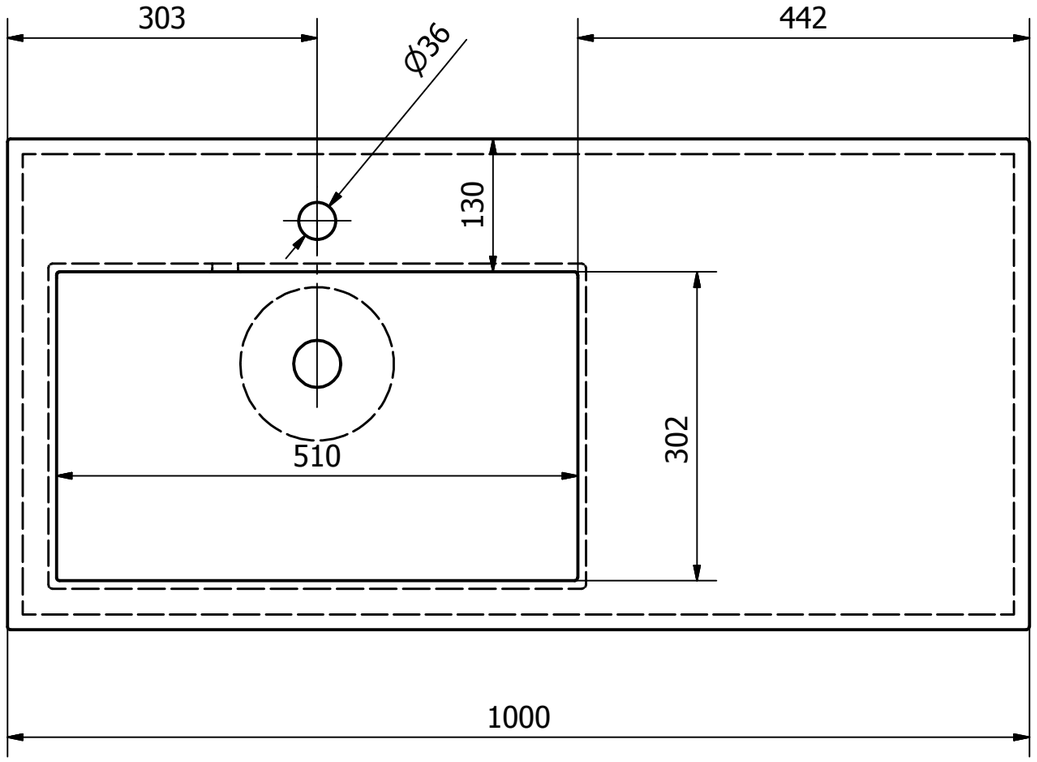

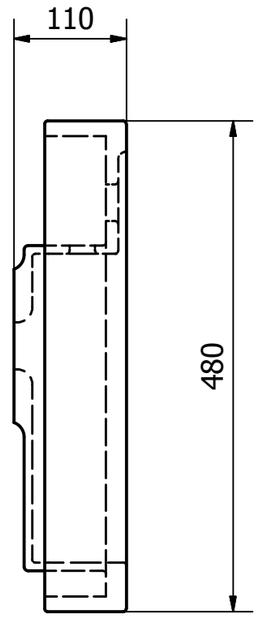

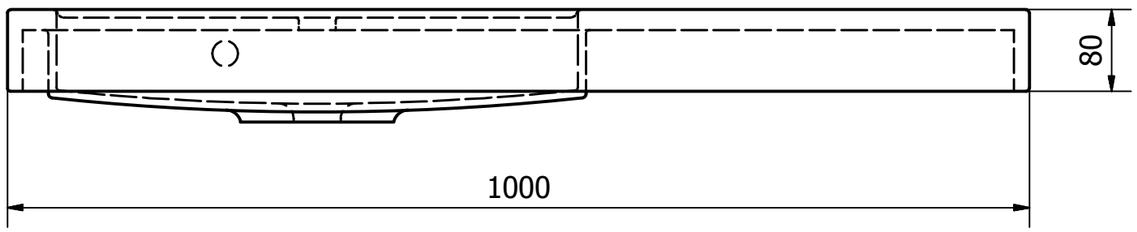

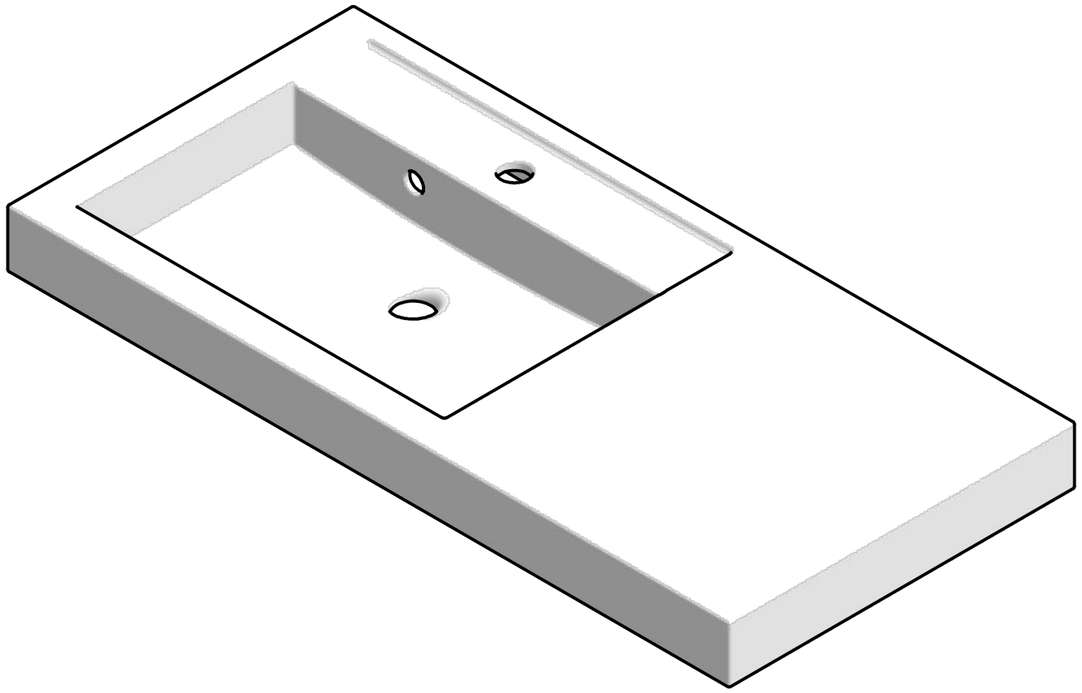

Designed by	Checked by	Approved by	Date		Date	
			ELS100P	Edition	Sheet 1 / 1	