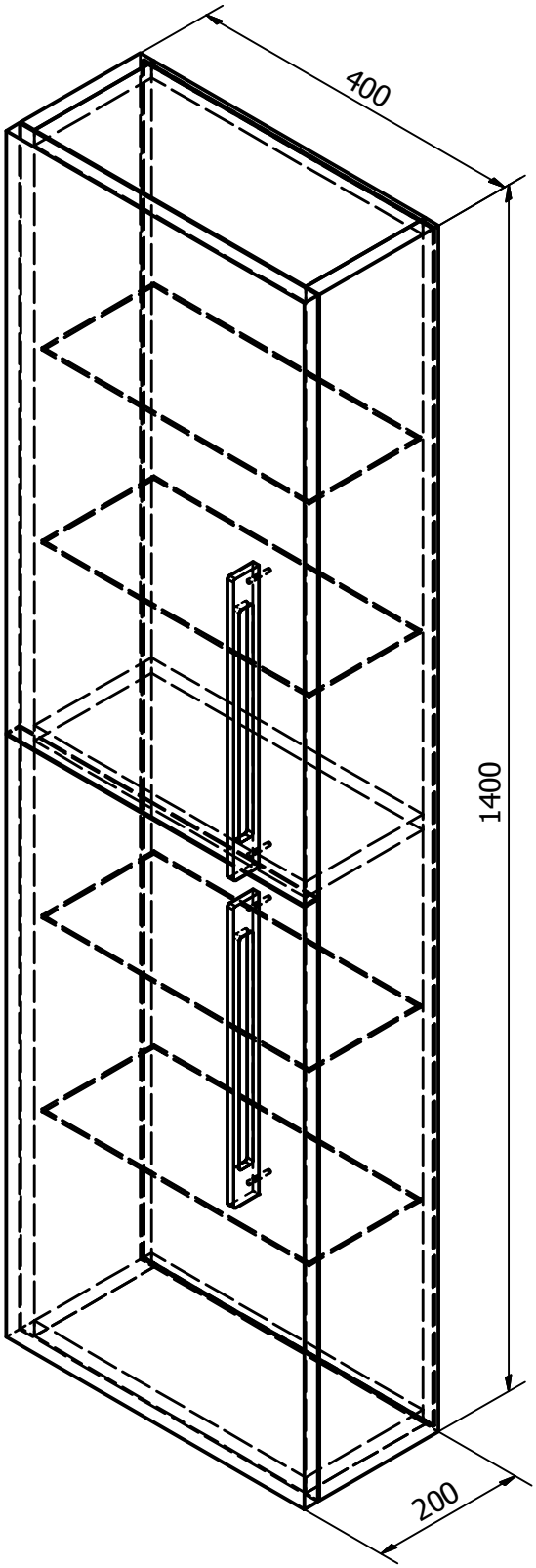

ERRA

Designed by	Checked by	Approved by	Date		Date	
MARIOKA II.						
		59117LP		Edition	Sheet 1 / 2	