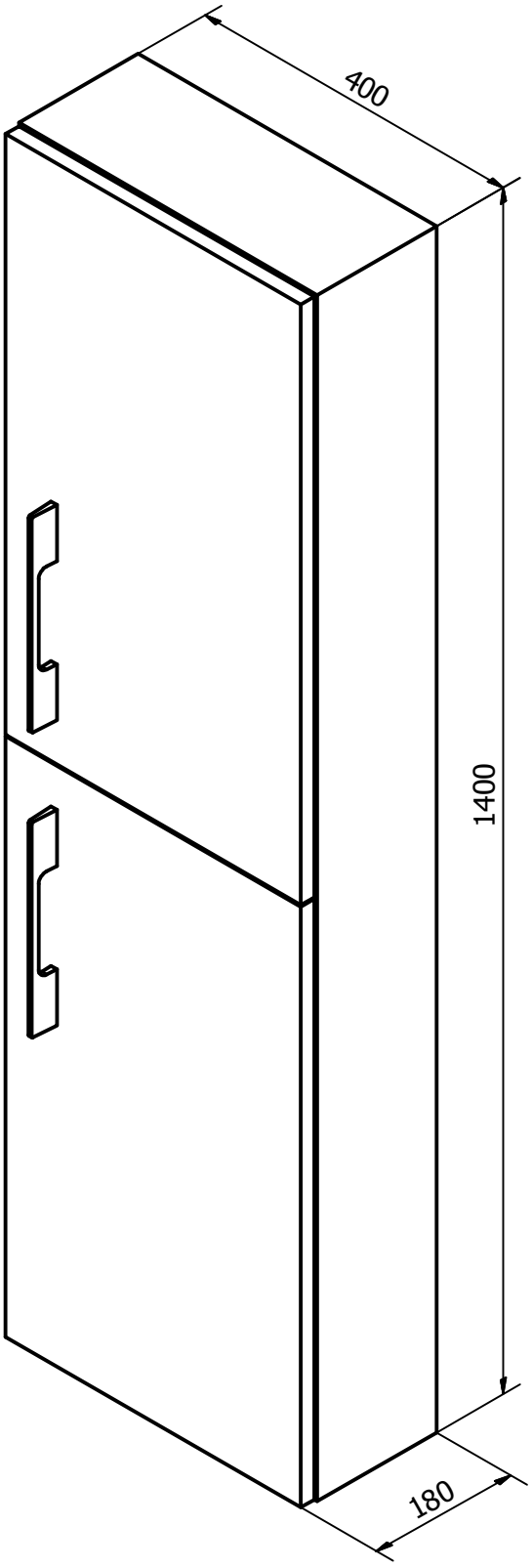

ERRA

Designed by	Checked by	Approved by	Date		Date	

NATY			
	53033P	Edition	Sheet 1 / 1